HORIZONTAL SAFETY SYSTEM

HORIZONTAL SAFETY SYSTEM
PSA 7

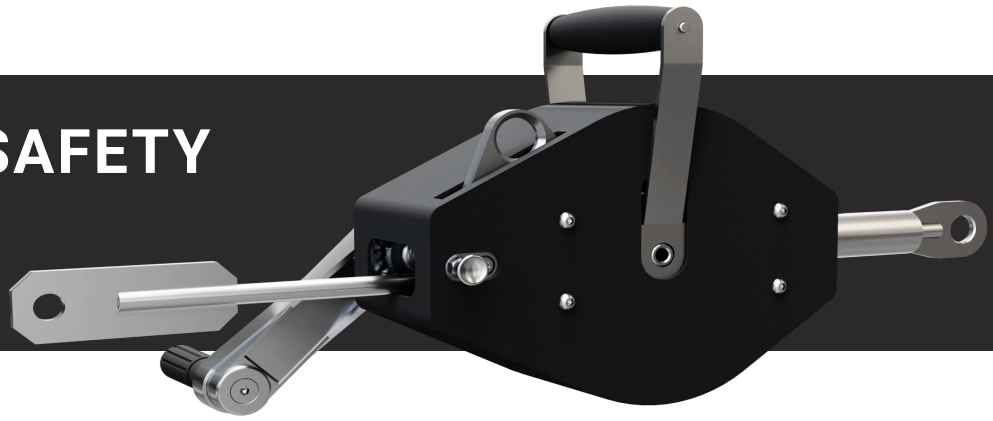

KEY FEATURES

PSA-7 is a complete horizontal safety system with a steel cable in one handy device. Inside the housing, there are 7 m of steel cable, extended and retracted using the handle.

The system can be anchored to various structural parts using anchors according to EN 795A with a minimum strength of 30kN. Recommended are dynamic anchoring posts of the DSA type.

One person is able to tension the cable unassisted. No other tools or tensioning devices are needed or allowed – all it takes is the handle located at one side of the housing. It is also not allowed to use any tools or objects to elongate the handle.

To loosen the tensioned cable, simply pull the locking lever towards the exit opening, from which the cable extends, to unlock the mechanism and retract the cable. Throughout this operation the handle needs to be able to move freely.

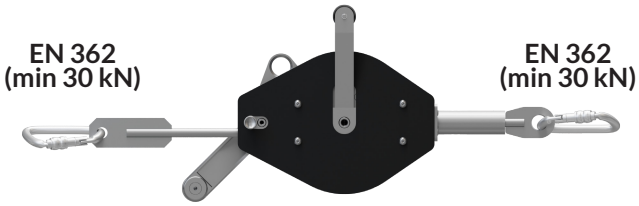

PARTS OF THE PSA 7

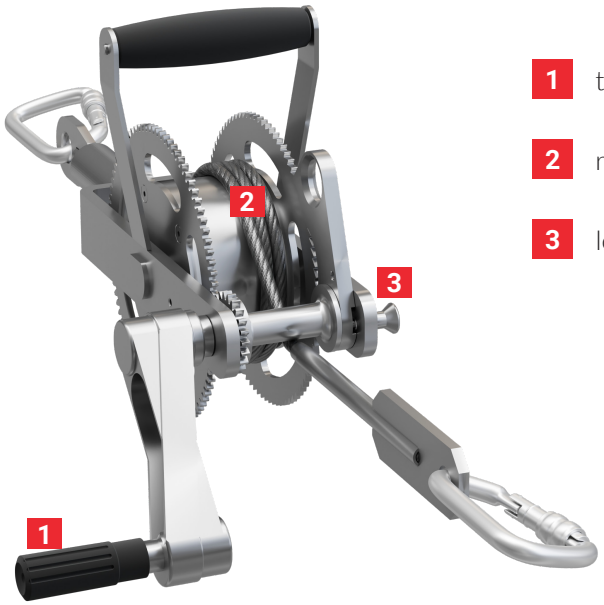

1 tensioning handle

2 rope groove

3 locking lever

TECHNICAL FEATURES

STANDARD:	EN 795 typ B	**MATERIAL:**	Stainless steel, galvanised steel
MAX. NO. OF USERS ALLOWED:	2 people	**WEIGHT:**	9,85 kg

USING THE SYSTEM

The maximum allowed span of cable with no intermediate modules is the length of the cable (7 m in the longest version).

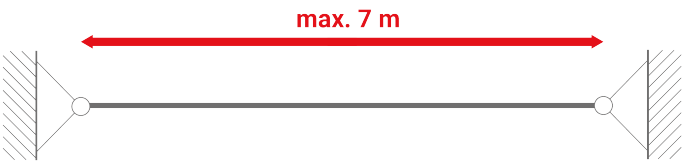

If intermediate modules are used, the minimum distance between those should be 2 m.

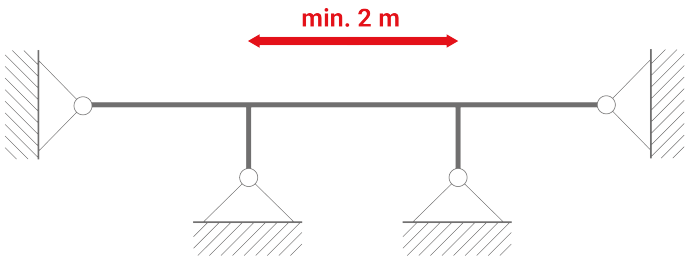

The minimum angle if change of direction using an intermediate module is required is 135°

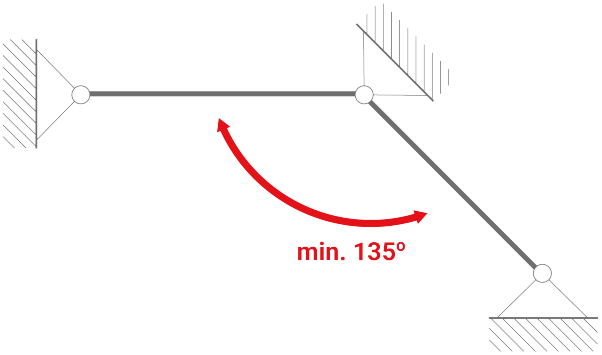

The maximum deviation from the horizontal must not exceed 15°

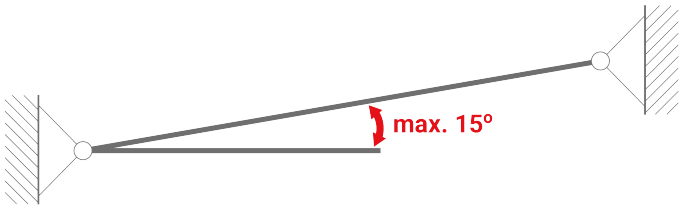

The minimum free fall clearance (MSD) is calculated as follows:

1. System deflection (B – the maximum deflection when used by an adult. For the 7 m length version B equals 1,8 m);
2. 2. The length of other functional parts: lanyard according to EN 354, an energy absorber according to EN 355, a fall arrest slider according to EN 353-2, a fall arrest block according to EN 360 (C – please refer to the manuals for the actual system parts);
3. Safety factor – 2,75 m (D)

Two people can use the system at once. While using the system in this manner, all operators should be aware of the risk that their coworker will be pulled towards them in the case of their fall. There is also a swing fall potential.

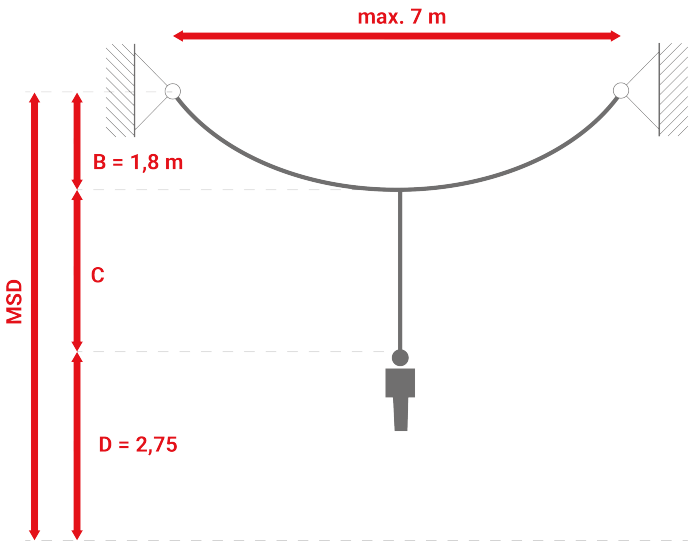

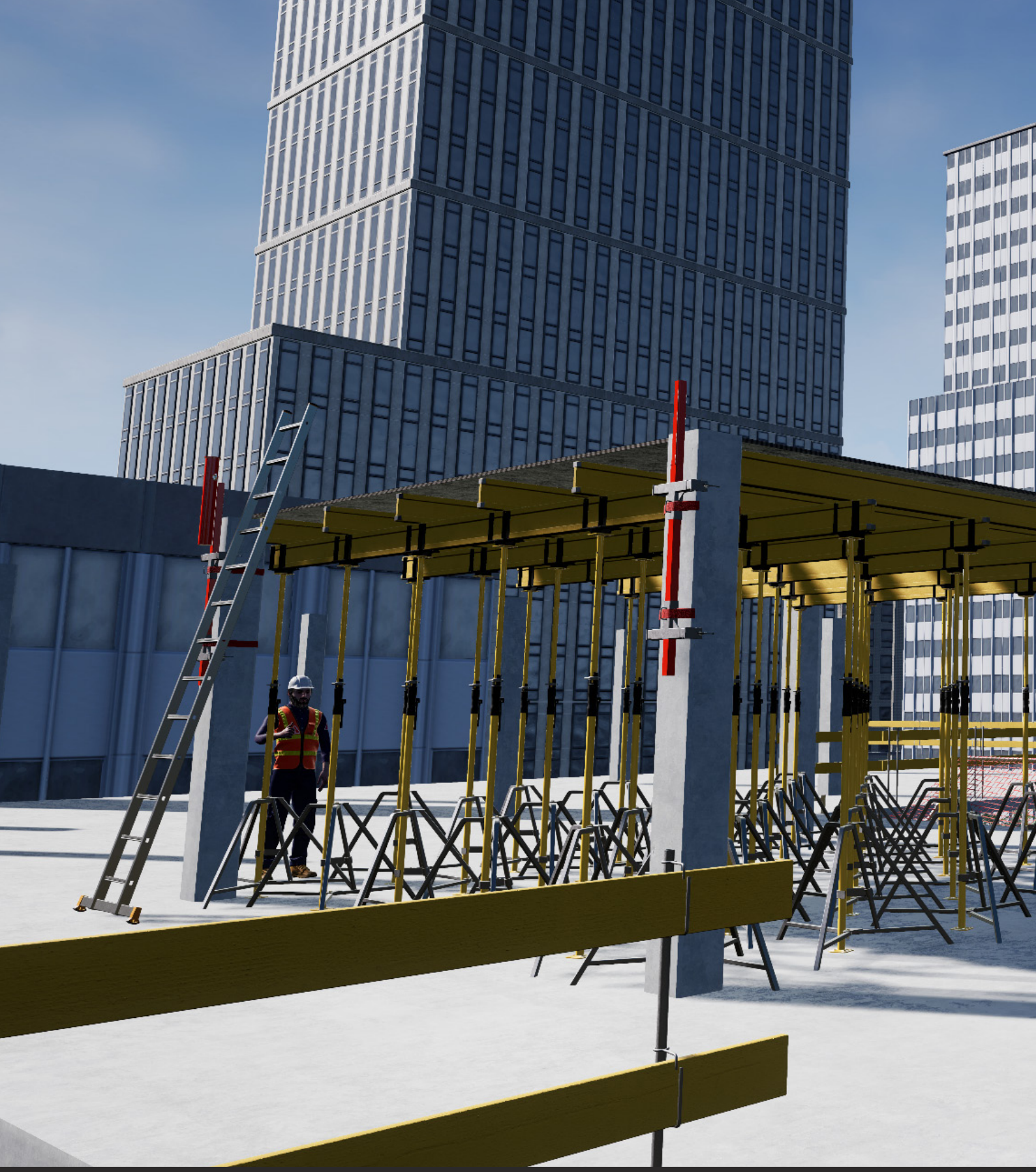

ROCK MASTER

CBR Rock Master Sp. z o. o. Sp. k.
ul. Królewska 94/11, 30-079 Kraków,
tel. +48 12 290 30 35;
e-mail: office@rockmaster.eu
NIP: 945-18-44-489

Centrum Badań i Rozwoju
ul. Sportowa 20, 32-083 Balice,
e-mail: cbr@rockmaster.eu

www.rockmaster.eu